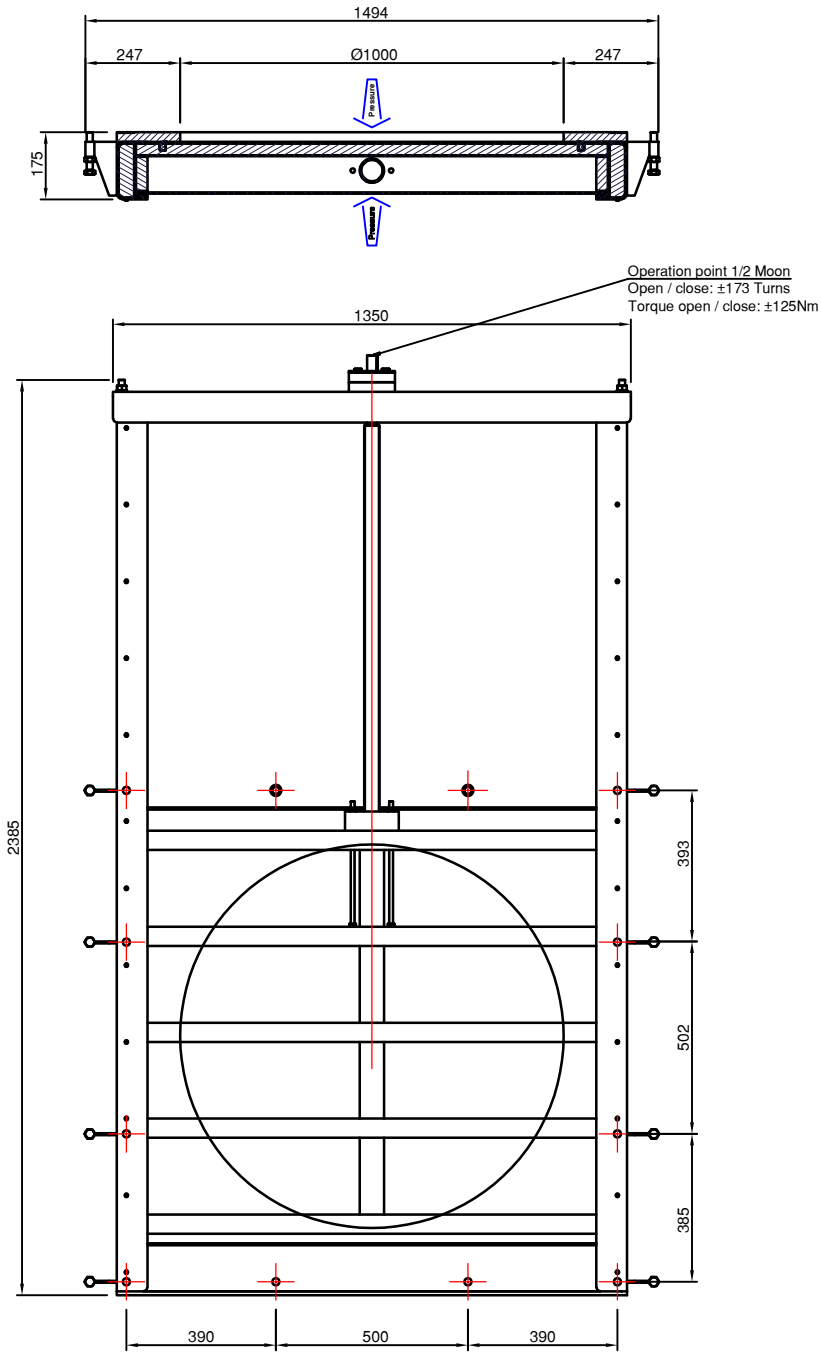

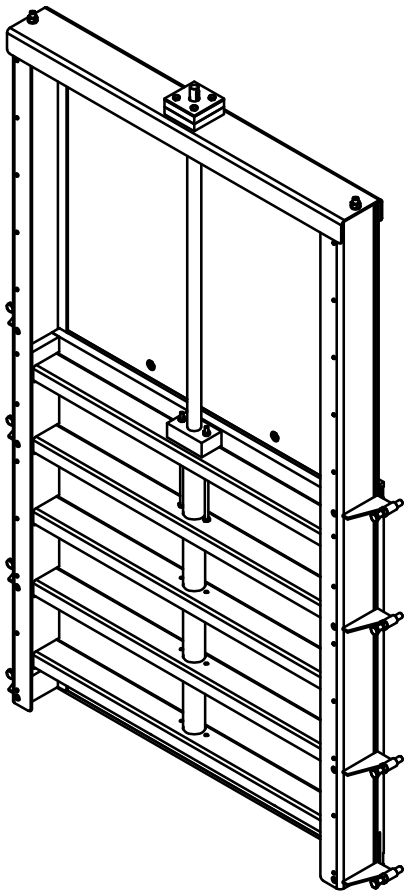

Dimensions in millimeters, unless otherwise stated.

Version	Date	Drawn by	Description	Appr. by	Date
1	29-07-2024	RH			

Description:

ROwat RSA 5 Penstock Ø1000mm
≤ 5MwC On/Off Seating Pressure

Remarks:
sales@rowat-watercontrol.com

Weight : 232kg

Projectnumber:

ROwat WATER CONTROL

Drawn by: RH Date 29-07-2024 Format: A4

Art.nr: RSAK51000

Drawing nr: RSAK51000

Version: 1

Copyright reserved